Illustrated Parts Manual

RC190-BS550
RC190-GCV160

19” Commercial Hover Mower

EVERGREEN TURF EQUIPMENT

1028 4th Street SW, Bldg A • Auburn, WA 98001 • Phone: (253) 333-3345 • Fax: (253) 414-1293

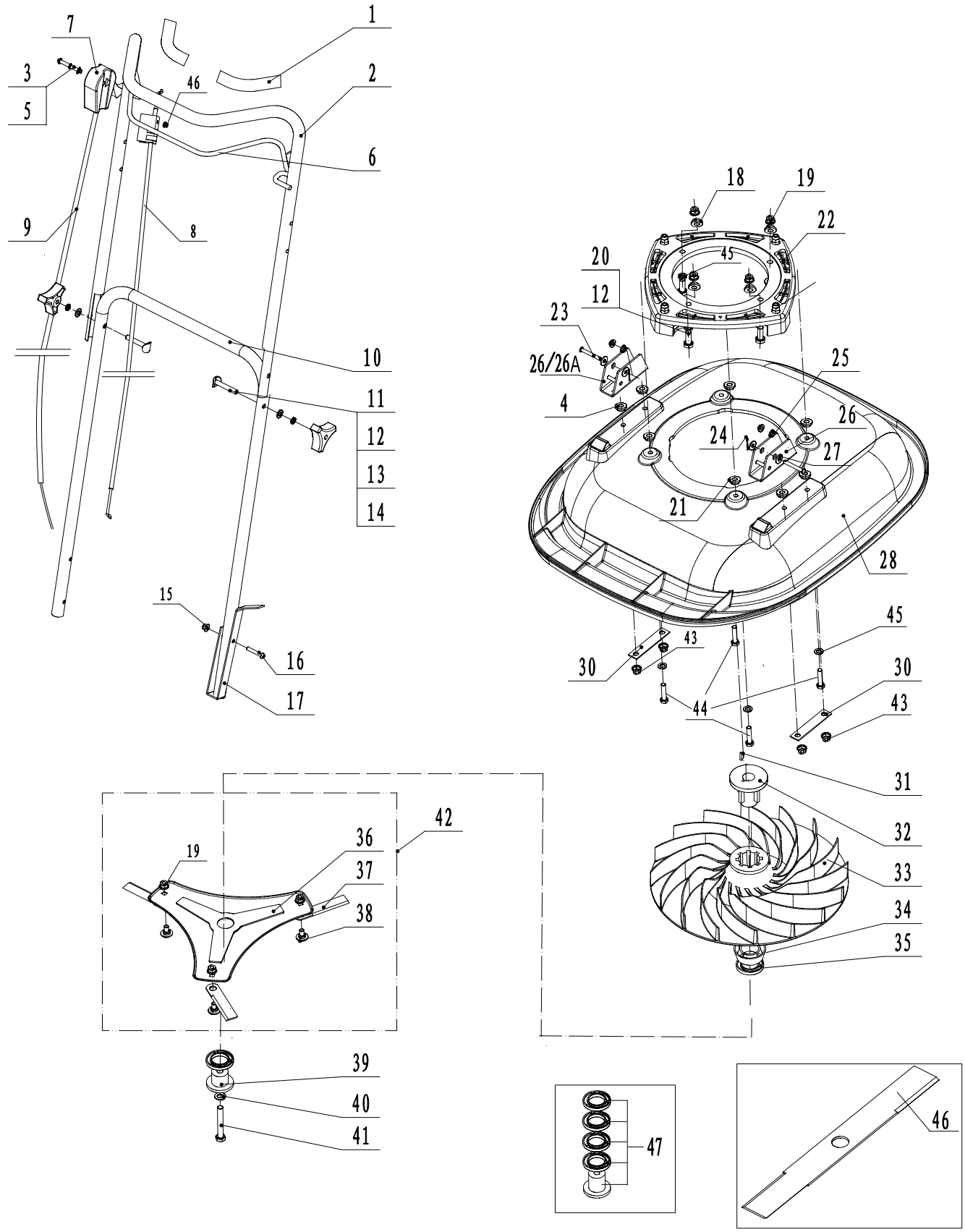
1
2
3
5
6
7
8
9
10
11
12
13
14
15
16
17
18
19
20
22
23
25
26/26A
4
24
26
27
21
28
45
43
30
44
31
32
33
34
35
42
36
37
38
39
40
41
47
46

HOVER MOWER DECK • FIGURE 1

ITEM	PART NUMBER	DESCRIPTION	B&S	Honda	COMMENTS
1	4020540	HANDLE GRIP	2	2	One Grip
2	4016530	HANDLE, UPPER	1	1	
3	7260636	SCREW, PAN HEAD, 6x30	1		Briggs only
3	7260625	SCREW, PAN HEAD, 6x45		1	Honda only
4	4121080	INSERT/SPACER, HANDLE BRACKET	4	4	After S/N D0201XXXX
5	7030601	WASHER	1	1	
6	4012500	BALE, HANDLE CONTROL (OPC)	1	1	
7	5070630	THROTTLE LEVER (Cable not incl.)	N/A	1	Honda only
8	5072030	CABLE, ENGINE BRAKE	1	1	
9	5072130	THROTTLE CABLE		1	Honda only
10	4016520	HANDLE, LOWER	1	1	
11	5010811	BOLT, UPPER HANDLE (PIVOT), 8x50	2	2	
12	7030819	WASHER	5	6	
13	7040802	WASHER, SPRING	2	2	
14	5010812	KNOB, HANDLE	2	2	
15	7020602	NUT, NYLON, M6	1	1	
16	7260642	SCREW, PAN HEAD, M6x35	1	1	
17	4260731	STAND, KICK	1	1	Honda left side , Briggs right side
18	7120190	INSERT/ENGINE BASE	3	4	
19	7020830	NUT, FLANGE, M8	6	7	
20	7010852	BOLT, 8X45	3	4	
21	4121070	INSERT/SPACER, DECK	3	4	After S/N D0201XXXX
22	4131112	BASE, ENGINE (PLASTIC)	1	1	
23	7130628	PIN, LOWER HANDLE	2	2	
24	7130101	PIN, SPLIT	2	2	
25	7120750	WASHER	4	4	
26	4260353	BRACKET, HANDLE	1	2	
26A	4271700	BRACKET, HANDLE, BRIGGS	1	N/A	Briggs only
27	7030604	WASHER	4	4	
28	4240332	DECK, GREY	1	1	
30	4131101	PLATE, ADAPTER	2	2	
31	7110408	KEY, WOODRUFF	1	1	
32	4120230	ADAPTER, IMPELLER TO CRANKSHAFT	1	1	Prior to S/N D0201XXX
32	4120232	ADAPTER, IMPELLER TO CRANKSHAFT	1	1	After S/N D0201XXXX
33	3140011	IMPELLER	1	1	
34	4120241	FLANGE (CONE), 30mm	1	1	
35	4120250	SPACER, HEIGHT ADJUSTMENT	2	2	
36	3050610	DISK, BLADE MOUNTING	1	1	
37	3010670	BLADE SET (3)	1	1	One set of 3 blades
38	7010824	SCREW, BLADE MOUNTING	3	3	
39	4120262	HUB, 32mm	1	1	
39	4120264	HUB, 43mm	1	1	Optional - use with bar blade for shorter cut
40	7031009	WASHER	2	2	
41	7011115	BAR BLADE BOLT	1	1	
42	3050520	DISK ASSY W/BLADES	1	1	
43	7020803	NUT, LOCK	8	8	
44	7010843	BOLT	4	4	
45	7030807	WASHER	8	8	
46	3010700	BAR BLADE, HOVER MOWER	1	1	
47	LC-190	LOW CUT KIT	1	1	Optional - Lowers HOC by 1/2"
Pg 6	HR-190	HI-RISE KIT	1	1	Optional - Increases HOC by 1-1/4"

18” HANDLE EXTENSION & WHEEL KIT • FIGURE 2

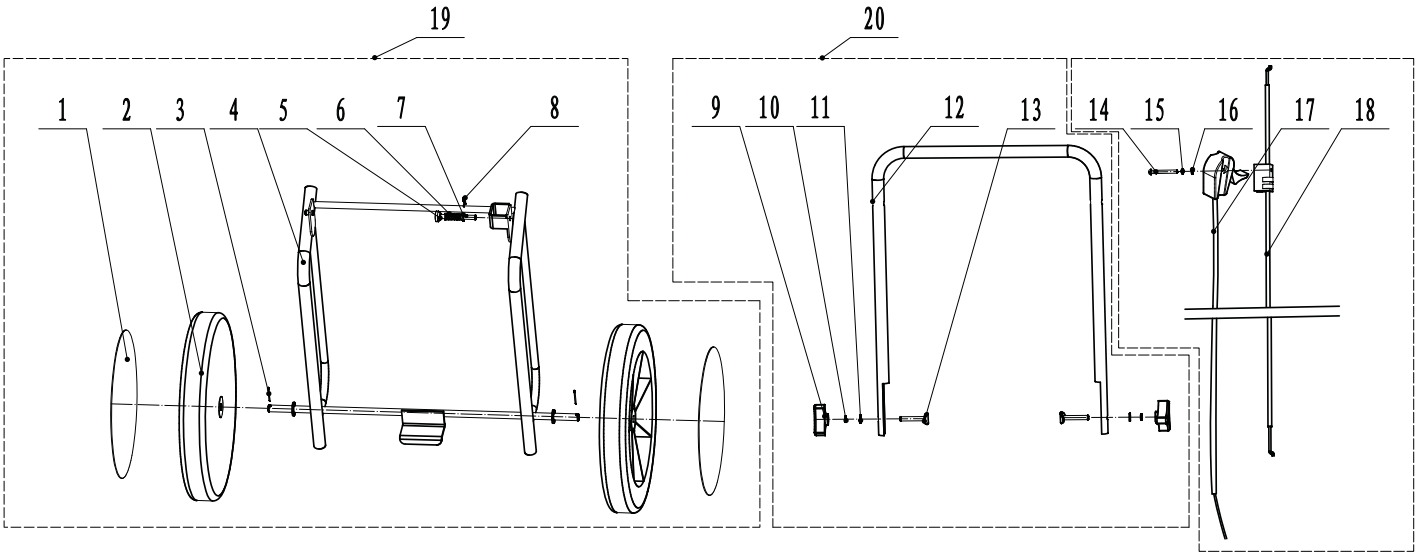

ITEM	PART NUMBER	DESCRIPTION	B&S	Honda	COMMENTS
1	4060511	WHEEL CAP	2	2	
2	8010701	WHEEL, HOVER (WHEEL KIT)	2	2	
3	7130211	PIN	2	2	
4	N/A	FRAME	1	1	Not Available - Order Wheel Kit Assembly
5	4181250	PIN ASSY (WHEEL KIT)	1	1	
6	7050606	SPRING, WHEEL KIT PIN	1	1	
7	7030802	WASHER, 8	1	1	
8	7130202	PIN, HITCH	1	1	
9	5010812	KNOB, HANDLE	2	2	
10	7040802	WASHER, SPRING 8	2	2	
11	7030802	WASHER, 8	2	2	
12	N/A	HANDLE	1	1	Not Available - Order Handle Kit Assembly
13	5010811	BOLT, UPPER HANDLE (PIVOT), 8x50	2	2	
14	7260641	SCREW, PAN HEAD 6x50	1	1	
15	7040602	WASHER, SPRING	1	1	
16	7030601	WASHER	1	1	
17	5072180	CABLE, THROTTLE (HANDLE EXT)	1	1	
18	5072220	CABLE, ENGINE BRAKE (HANDLE EXT)	1	1	
19	4041500	WHEEL KIT, HOVER MOWER	1	1	
20	4012561	HANDLE EXTENSION KIT, 18"	1	1	

HANDLE EXTENSION & WHEEL TRANSPORT KIT

HANDLE EXTENSION KIT (#4012561)

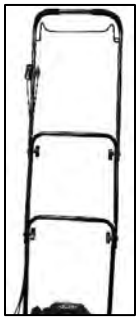

KIT COMPONENTS

- Middle handle section (1)
- Engine Brake cable w/ cover (1)
- Throttle cable (1 – Honda Engine only)
- Knob Assembly (2)
- Cable tie straps (2)

INSTALLATION STEPS & NOTES

STEP 1 - Remove the engine stop lever from the upper handle – by pulling one side out of the mounting hole. Also remove the inner cable end.

STEP 2 - Remove the engine stop cable adjuster from the upper handle (throttle also on Honda)

STEP 3 - Remove the inner end of the engine stop cable from the engine brake lever.

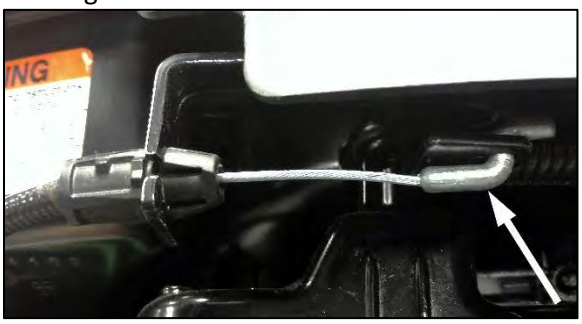

STEP 4 - Remove the outer cable from the bracket – by using pliers to compress the locking tabs while pulling.

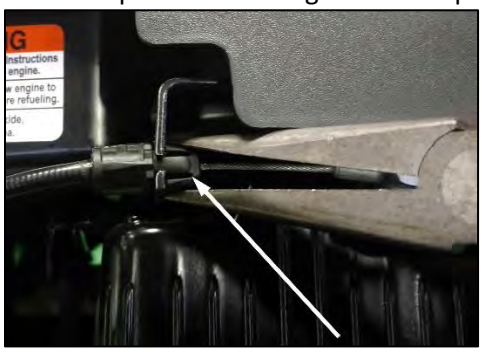

STEP 5 - Install the kit's (longer) cable end by inserting the end onto the engine brake lever, then inserting the outer cable into the bracket. Install the additional handle section, secure with knobs, then re-install the engine stop cable adjuster and lever.

WHEEL TRANSPORT KIT (#4041500)

INSTALLATION STEPS & NOTES

STEP 1 - With the frame positioned behind the unit as shown above, insert the mounting post into the right side handle hole first, followed by the spring-loaded post in the left side.

STEP 2 - Once the frame is installed, place your right foot behind the wheel, pull up slightly on the top handle. This will raise the back of the deck off the ground. At the same time, pull the top handle back keeping the rear part of the deck only a couple inches off the ground.

STEP 3 - Continue this movement until the rear part of the deck is resting on the wheel kit base. Tilting the top handle down will raise the front of the hover mower and allow you to transport it.

HOVER MOWER CUTTING HEIGHT LIFT KIT (#HR190)

KIT COMPONENTS

1. Height Extension Skirt (1) 2. Clamp Bracket (8)

INSTALLATION NOTES

IMPORTANT… The rear portion of the skirt has a slightly lower edge that fits at the back of the deck…

With the skirt (open side up) and hover mower sitting side-by-side on the ground, place the deck onto the skirt….
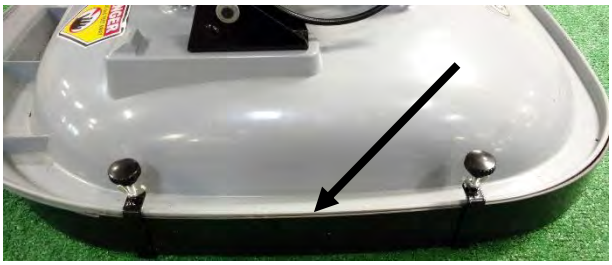
With the skirt in place, install the clamp brackets with 2 on the front, and 2 or 3 on the left and right side.
NOTE: The deck and skirt may need to be pushed into place to fully seat together.